TECHMI Group

Global Solutions for a Growing World

TECHMI BIO FES

FERMENTER SOLID SUBSTRATE

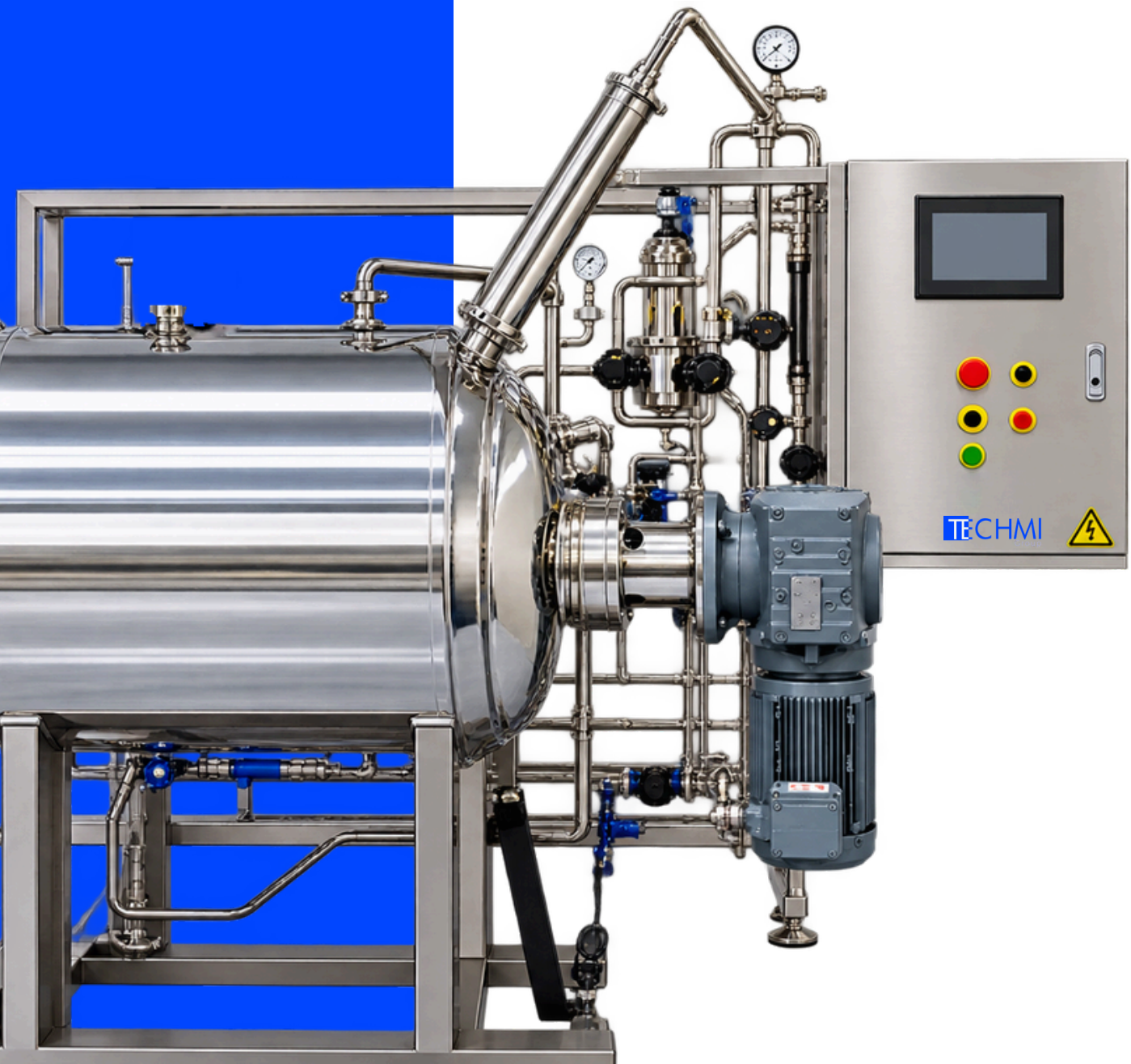

TABLE OF CONTENTS

1. Introduction. 3
2. Components and Features. 4
3. Technical Specifications. 7
4. Capabilities. 8
5. Control parameters. 9
6. Software. 10
7. Automation. 11
8. Sensors and settings. 12
9. Services. 13

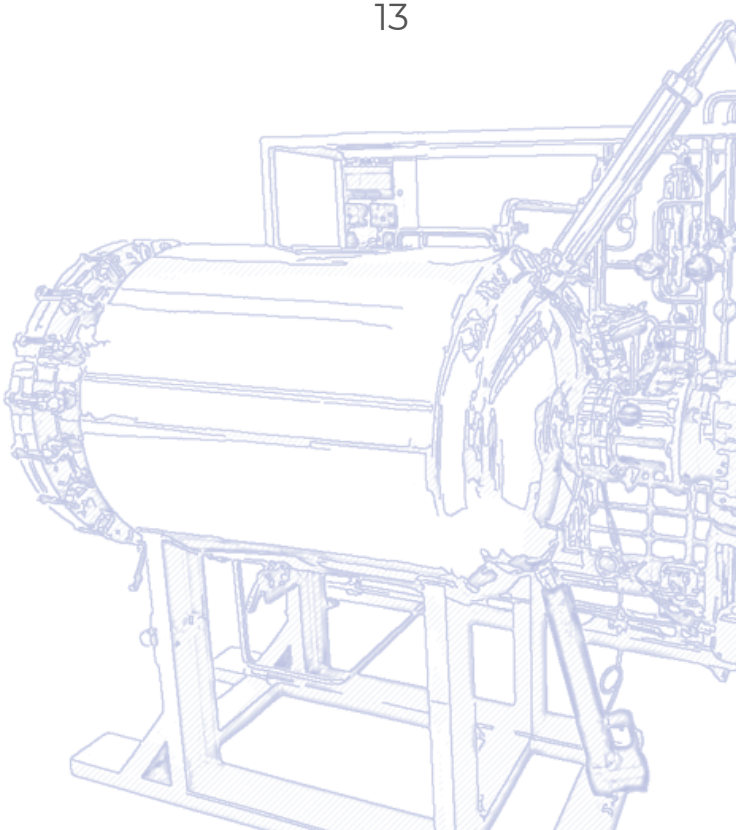

TECHMI BIO FES

SOLID-SUBSTRATE FERMENTER

TECHMI GROUP's FES solid-state fermenters are designed to provide an environment that optimally replicates the natural conditions in which fungi grow, thereby increasing spore production. These fermenters are specifically designed to cultivate microorganisms in a solid substrate, such as grains, cereal husks, agricultural waste, or other organic materials.



AVAILABLE VOLUMES

10L → 20L → 50L → 100L → 300L → 500L → 1000L

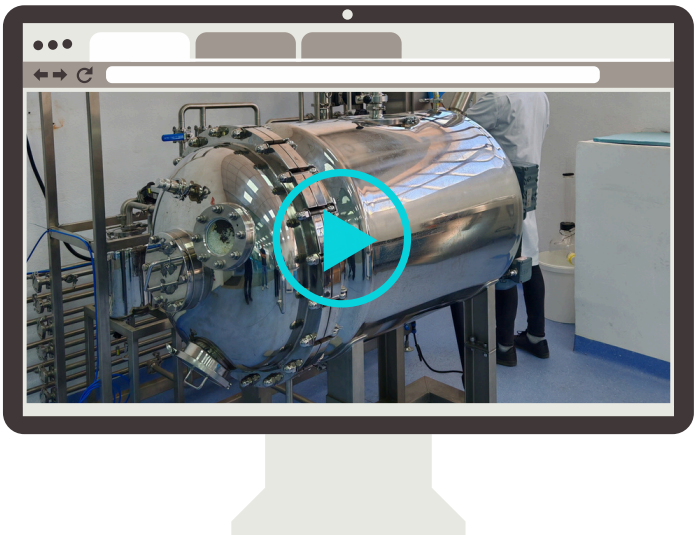

The **Techmi Bio FES** is a horizontal stirred-tank bioreactor designed to optimally replicate the natural conditions in which fungi grow, thereby promoting spore production. It is designed to cultivate microorganisms on solid substrates such as grains, cereal husks, agricultural waste, or other organic materials.
It combines internal mechanical agitation via paddles, control of temperature, humidity, and agitation speed, and a PLC control system with remote monitoring. It is available in various sizes and can also be custom-made.

COMPONENTS AND FEATURES



AUXILIARY PORT

VIEWING WINDOW

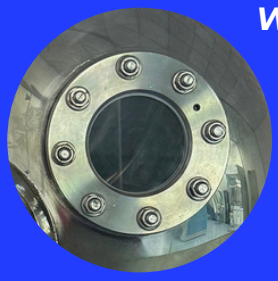

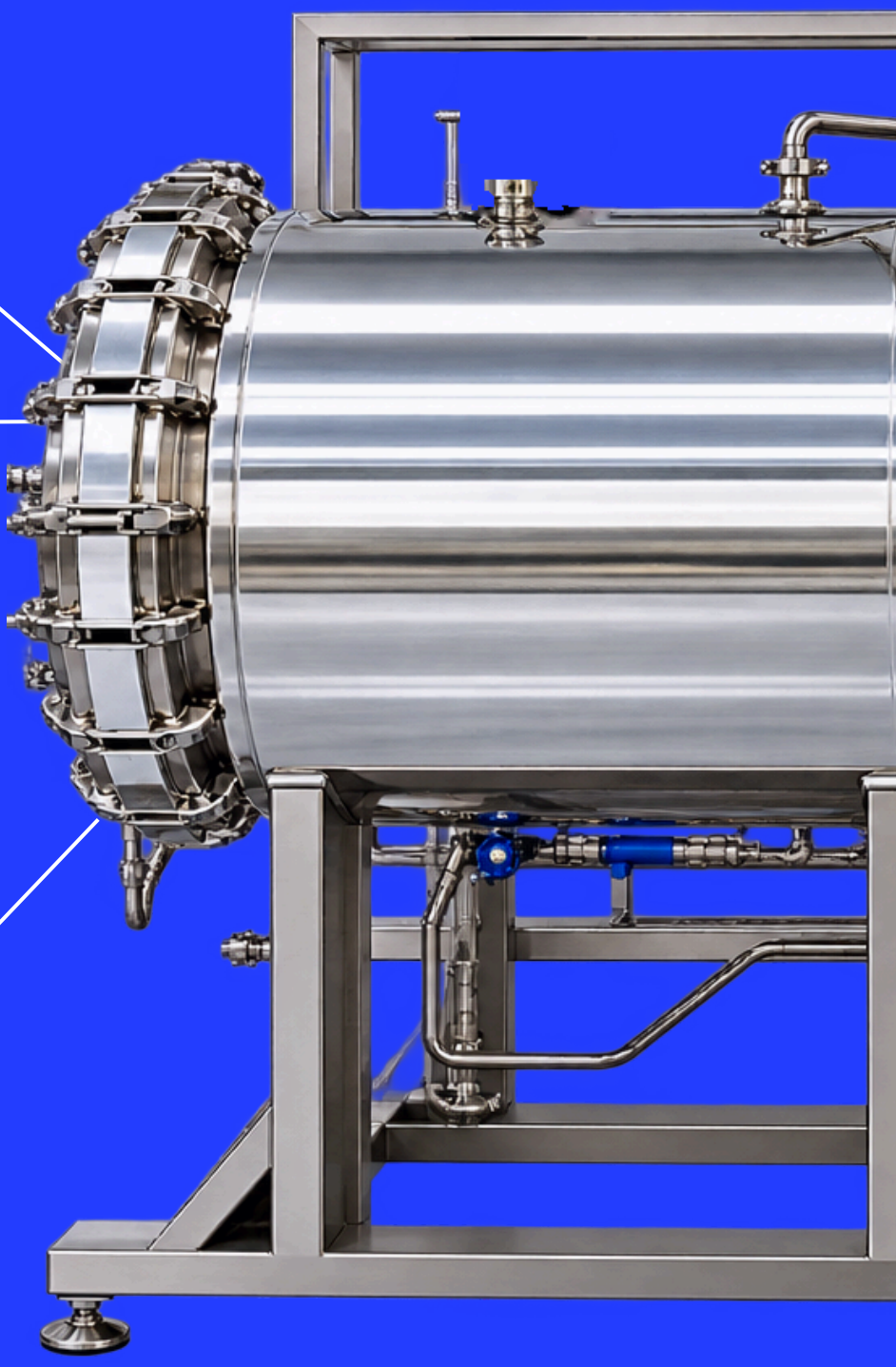

EXPORT PORT



COMPONENTS AND FEATURES

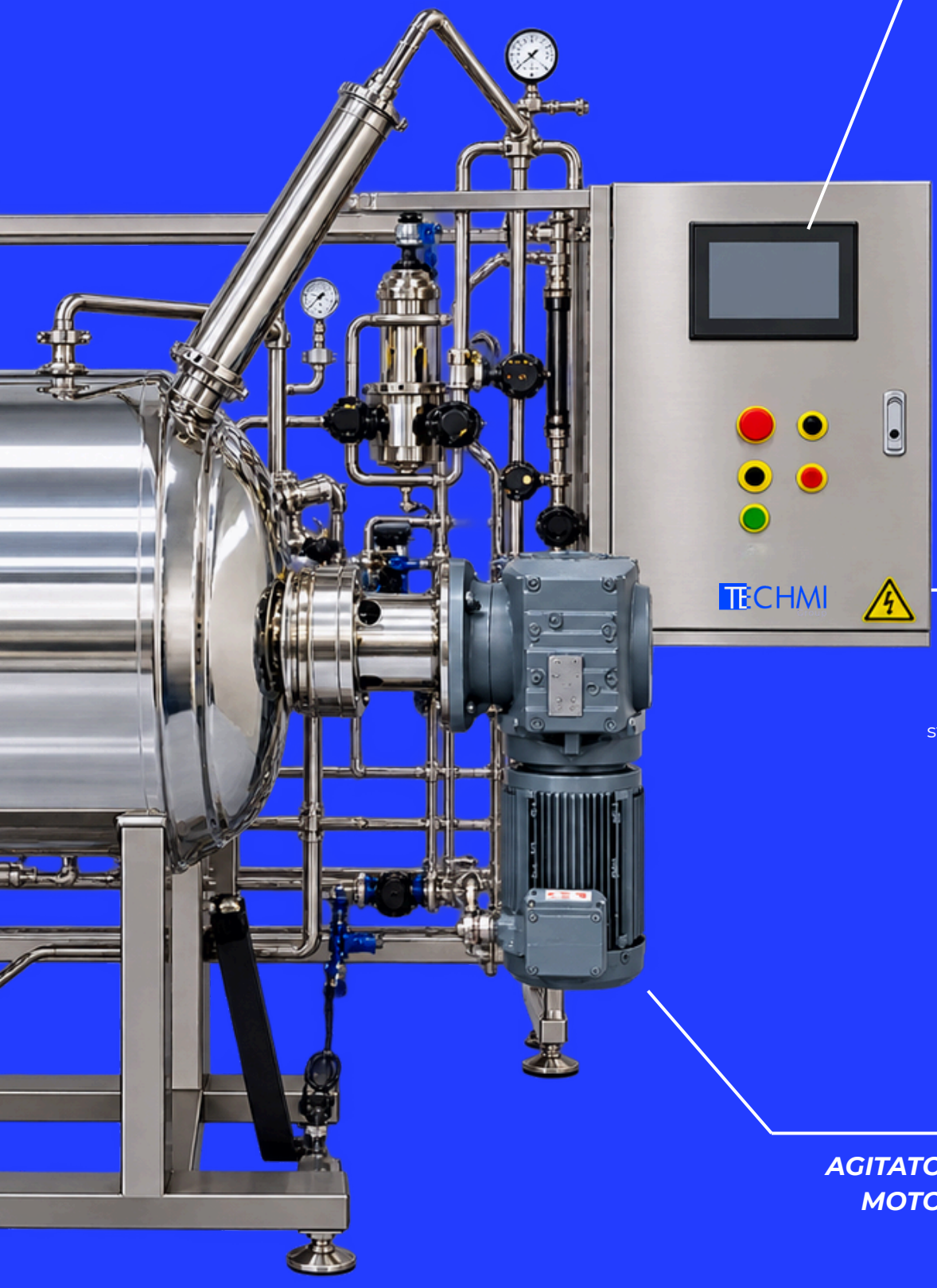

TOUCHSCREEN

Intuitive HMI interface that enables real-time control and monitoring of all process parameters. This facilitates operation, variable adjustment, and recipe management.

CONTROL TOWER

A fundamental structure that connects the equipment's electrical, automation, and control systems, ensuring stable, safe, and fully automated operation of the bioreactor.

AGITATOR MOTOR

COMPONENTS AND FEATURES

- Horizontal bioreactor with internal mechanical agitation via paddles (agitated drum).
- Internal design with no dead corners, which facilitates cleaning, prevents material buildup, and improves process uniformity.
- Level sight glass with a wide viewing angle for a clear view of the interior.
- 12V safety inspection light, ideal for real-time monitoring.
- Control of temperature, agitation speed, and humidity.
- Adjustable speed: 0–22 rpm.
- Mixing blades designed for axial and radial flow.
- Inoculation, feed, and discharge ports for sampling, as well as auxiliary ports.
- PLC control system with LCD touchscreen.
- Automatic PID control.
- SCADA system and remote monitoring.
- 316L stainless steel.
- SEW motor with reversible rotation.
- Working volume: 30–50%
- Available sizes: 10 L, 20 L, 50 L, 100 L, 300 L, 500 L, 1,000 L, and custom sizes.
- Diaphragm pressure gauges in all areas in contact with the material, for accurate and safe readings.

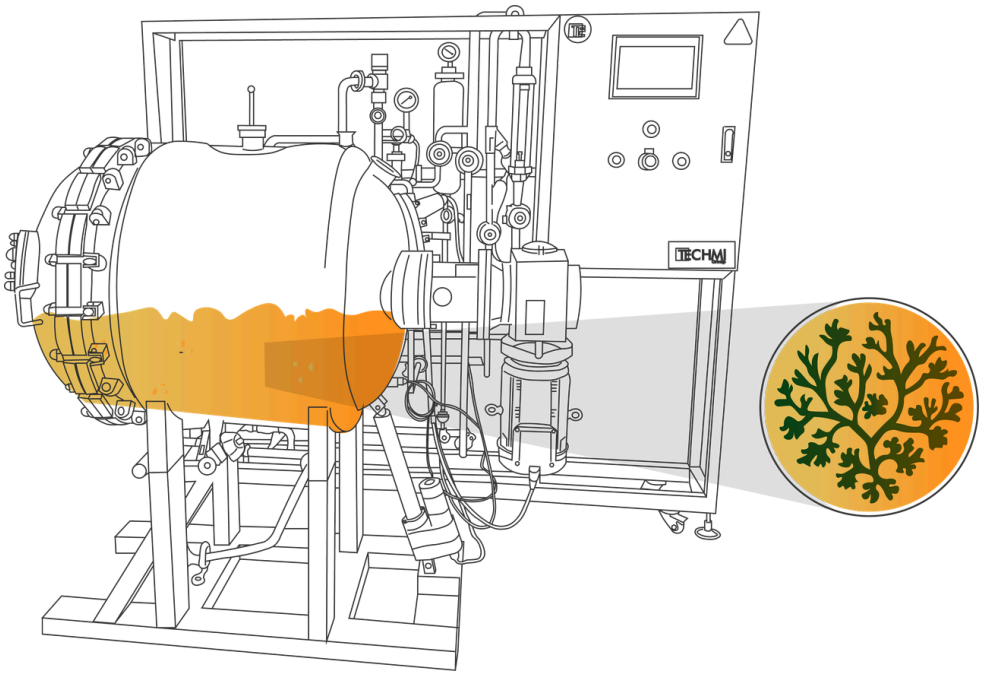

TECHNICAL SPECIFICATIONS

TECHMI BIO FES

Control tower	
Material	316L stainless steel
Screen	LCD Touchscreen
SCADA Communication	SCADA System with Remote Monitoring
Control System	PLC with automatic PID control
Tank	
Type	Horizontal, agitated drum
Material	316L stainless steel
Workload	30–50 %
Pressure range	0–0.35 MPa (0–3.5 bar), as indicated by the pressure gauge
Motor Drive	
Brand and type	Motor SEW con giro reversible
Rotational speed	0–22 rpm
Temperature Control	
Water-Jacket Recirculation Heating System	

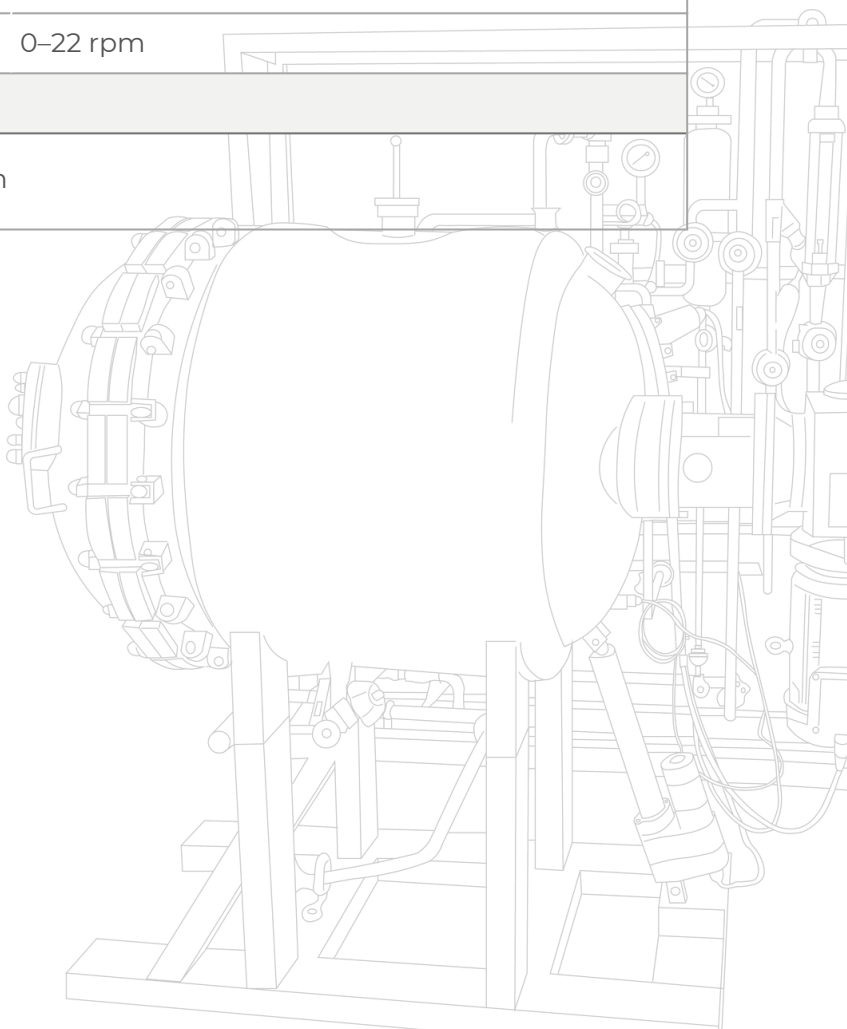

SKILLS

The **Techmi Bio FES** is available in a wide range of sizes, allowing users to develop a small-scale process and then scale it up to production using the same operating principle. Custom-built equipment is also available.

Designed for growing filamentous fungi and other microorganisms on solid media, with particularly high yields in spore production. Products that can be obtained include:

- **Biofertilizers and biocontrol agents:** Trichoderma, Bacillus, Metarhizium, Epicoccum, microbial consortia, and biofungicides.
- **Industrial enzymes:** cellulases, proteases, lipases, amylases, and pectinases.
- **Functional foods and protein fortification:** fermented flours, protein ingredients, and detoxified substrates.
- **Plant-based meat substitutes:** mycoprotein and fermented plant fibers.
- **Bioactive metabolites, organic acids, and biofuels:** pigments, citric, lactic, fumaric, and succinic acids, and second-generation ethanol.

The system can be integrated with a spore separation and extraction module, which allows for the transition from substrate colonization and sporulation to the collection of dry spores with high purity and viability, without intensive water use.

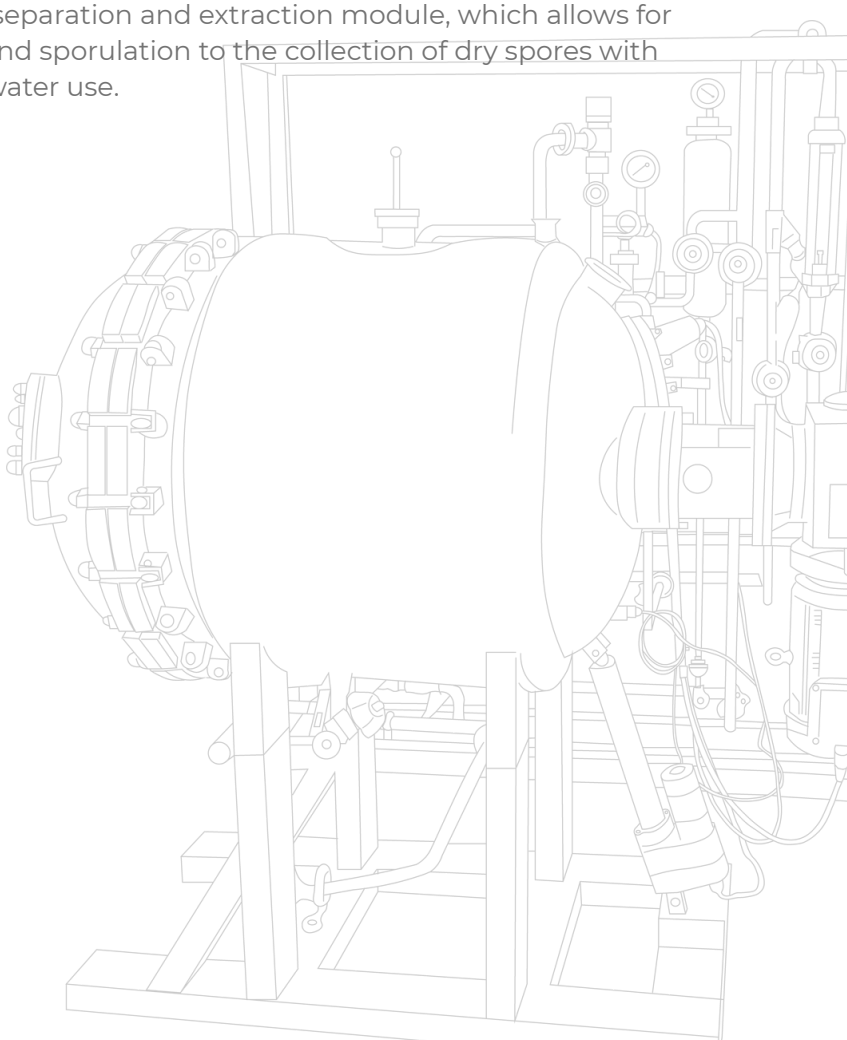

CONTROL PARAMETERS

The Techmi Bio FES allows for precise control of the variables that determine the growth and sporulation of microorganisms on a solid substrate, with automatic PID control via the touchscreen or remotely through SCADA.

TEMPERATURE

Automatic PID control of the process temperature via a measurement port in the tank, to maintain optimal growth conditions throughout fermentation.

AGITATION

Adjustable speed from 0 to 22 rpm with reversible rotation, to homogenize the substrate, promote heat and air transfer, and prevent compaction. The mixing blades generate axial and radial flow.

HUMIDITY

Control of substrate moisture content, one of the critical parameters of solid-state fermentation.

PRESSURE

The tank's operating range is from 0 to 0.35 MPa, displayed via a diaphragm pressure gauge. Air intake and gas exhaust are controlled by dedicated valves.

MONITORING AND RECORD-KEEPING

All parameters are displayed in real time on the LCD touchscreen.

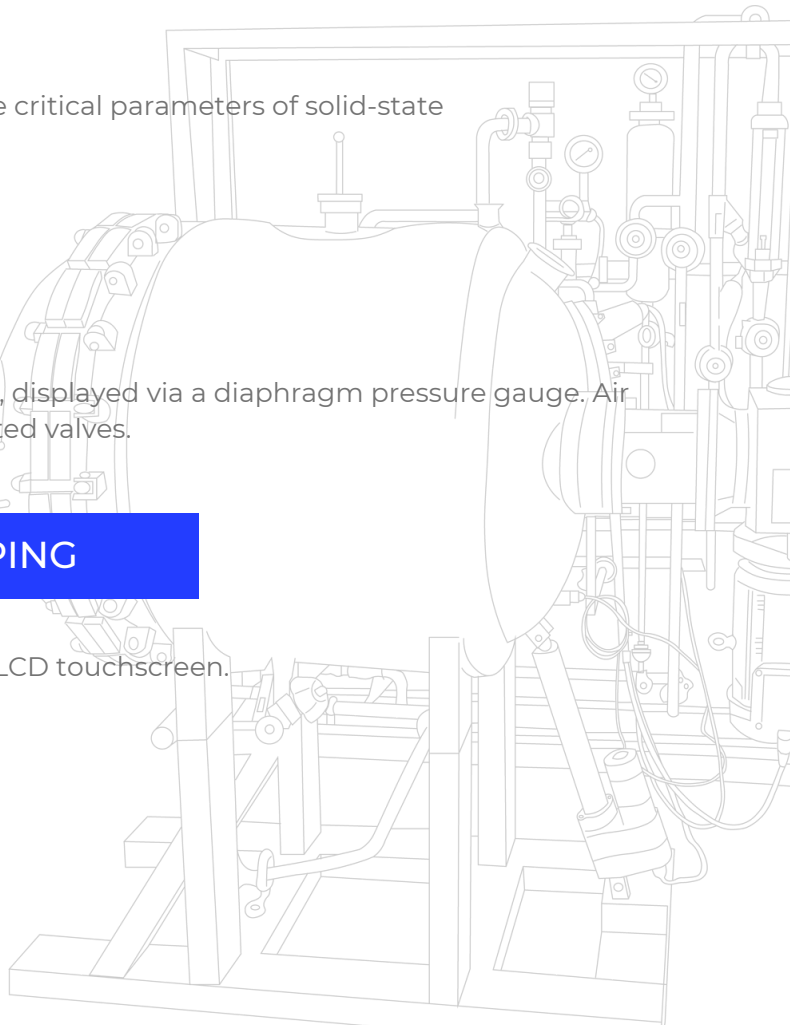

SOFTWARE

Techmi Group's bioreactor software is designed to provide total control of the bioprocess in an intuitive, precise, and scalable manner. It allows for the real-time monitoring and automation of critical variables such as temperature, humidity, agitation, and pressure, ensuring more stable, reproducible, and efficient processes. Thanks to its recipe system, historical data logging, and advanced automation, it facilitates scaling from the laboratory to industrial production while maintaining process traceability and control. Its intuitive HMI interface and ability to integrate with industrial systems make the Techmi Bio FES software a key tool for optimizing productivity and simplifying daily bioreactor operation.



AUTOMATION

The bioreactor automation system is based on a programmable logic controller that allows users to define, execute, and monitor operating sequences in a precise and reproducible manner. Through a graphical interface, users can configure culture recipes structured into different time stages, each with its own control parameters.

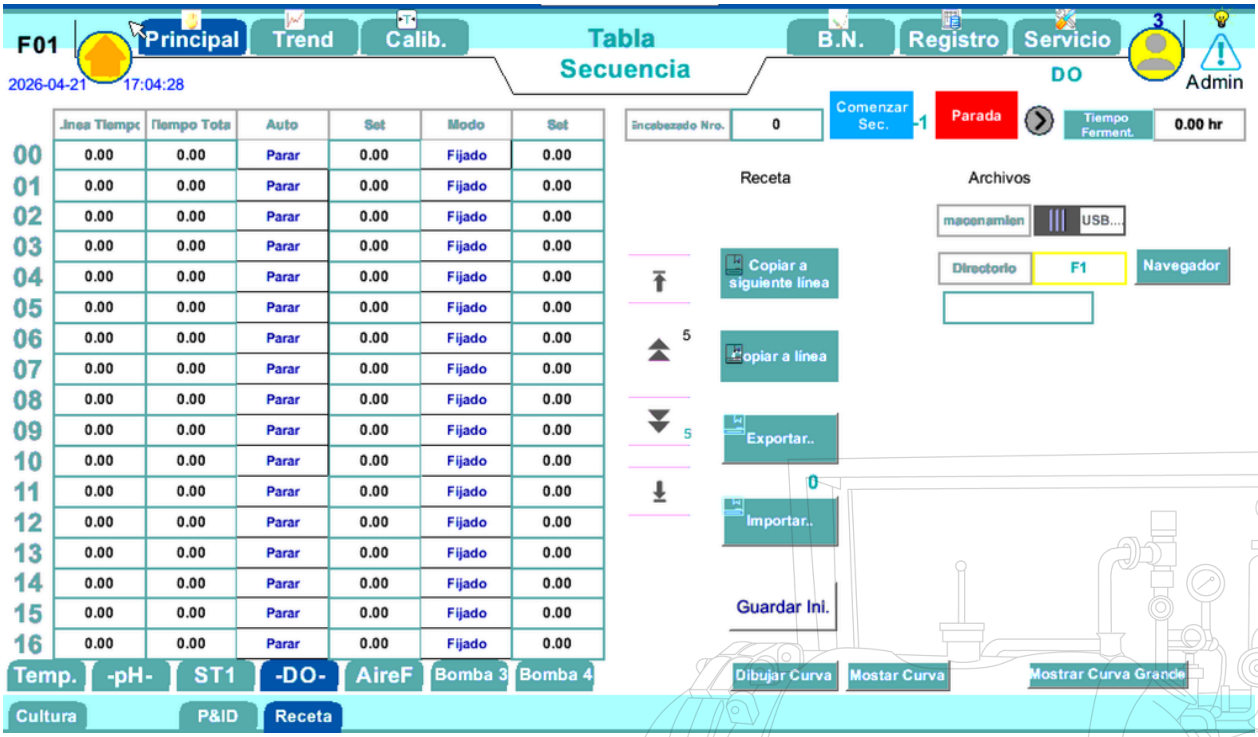

SENSORES

PROCESS CONTROL | SENSORS

	Sensor
Temperature	Pt100
Pressure	Pressure Transmitter
Humidity	Relative Humidity Sensor
External Signal Input	0 – 10 V or 4 – 20 mA

CONFIGURATIONS / OPTIONAL SERVICES

- *Special sampling and discharge valve for solid-state fermenters, allowing for safe intervention without compromising aseptic conditions.*
- *Pressure-differential spray system that distributes the inoculum evenly over the solid substrate.*
- *Customized lighting system tailored to the process*
- *Customized agitation system:*
  - *Customized paddle configuration*
  - *Interchangeable configuration option*
- *Customized tank design*
- *Integration of optional sensors*
- *CO_2 gas*

SERVICES

CUSTOM ENGINEERING



At Techmi Group, we develop customized solutions tailored to the needs of each industrial process. Our engineering team designs equipment and complete production lines that optimize productivity, automation, integration, and scalability for industries such as biotechnology, chemicals, pharmaceuticals, and food.

RESEARCH AND DEVELOPMENT

We have an R&D&I department and our own laboratory dedicated to the development, validation, and scaling of processes. We conduct pilot tests and optimize parameters to help our clients transform ideas and laboratory developments into efficient and reproducible industrial processes.



COMMISSIONING



Our specialized technicians install, configure, and commission the equipment directly at the plant. We guarantee a safe and efficient integration, verifying that the system is functioning properly and supporting the customer during the start of production.

TECHNICAL SERVICE

We offer specialized technical support and after-sales service to ensure the operational continuity of each installation. Our team provides maintenance, diagnostics, optimization, and rapid technical assistance—both on-site and remotely—ensuring the maximum performance of Techmi Group equipment.



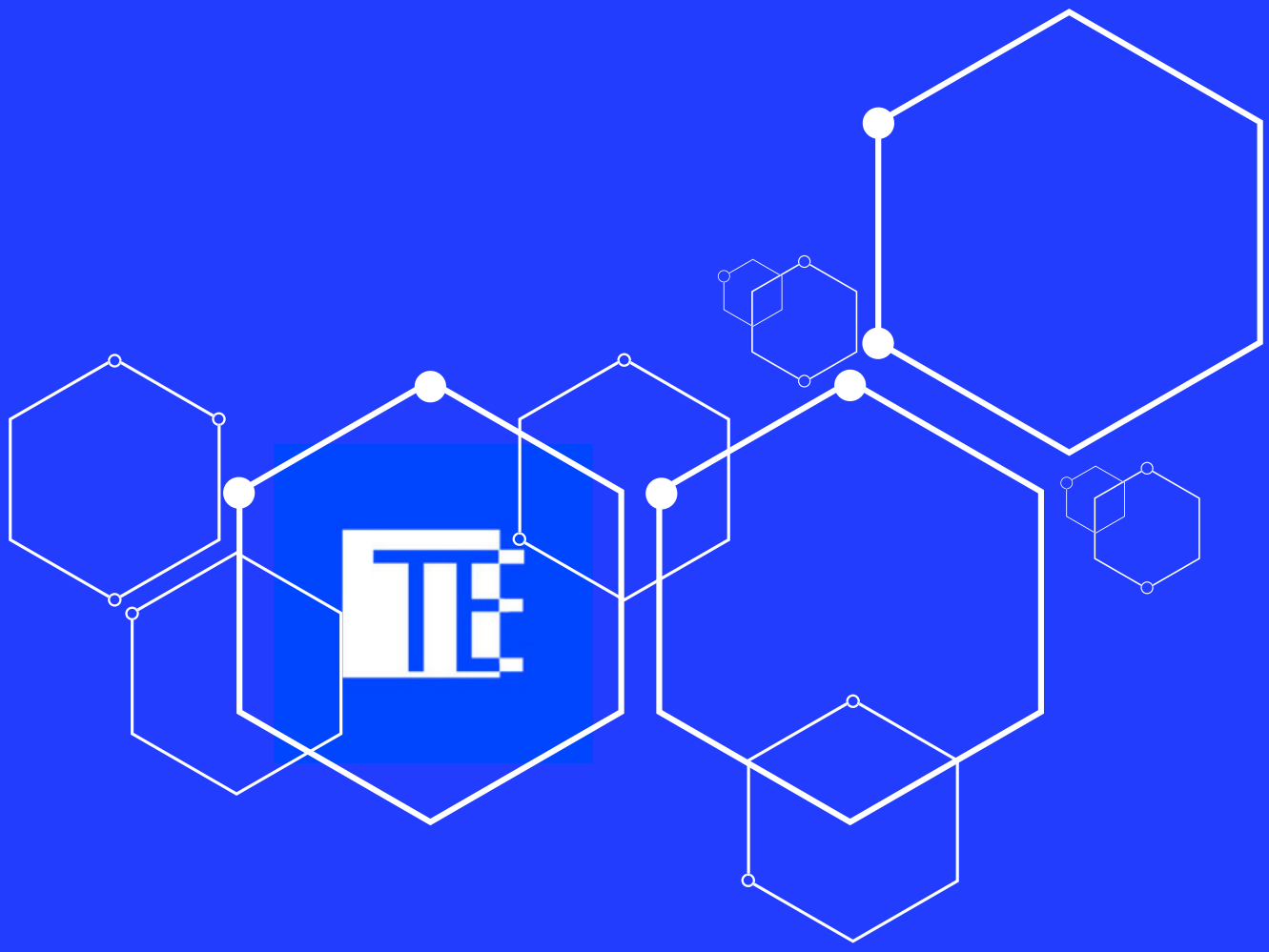

EUROPE
Sales Office
Carrer del Mas del Jutge, 57, CP
46909, Torrente, Valencia, Spain
info@techmigroup.com
techmigroup.com